ZONE	LTR.	REVISIONS DESCRIPTION	ECN NO.	DATE	BY	APPR'D
	A	RELEASED FOR PRODUCTION	DR00990	4/2/03	DPZ	
4B,4C 3B,3A	B	B1 ROTATED PORTS B2 REMOVED DIMENSIONS AND ADDED NOTES	72047	29APR09	SLK	CFH
1A	C	C1 TU122 WAS FM0000345	72363	26JAN10	SLK	CFH

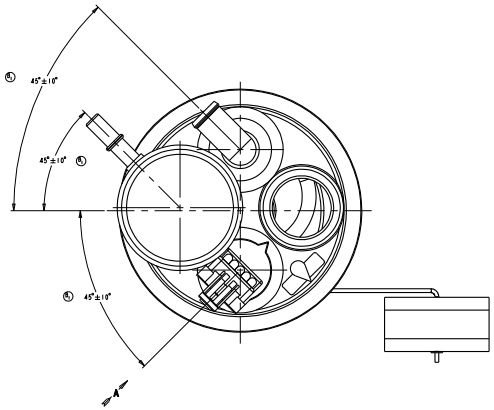

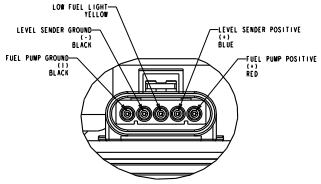

VIEW A
E-CONN
PIN OUT
SCALE 2:1

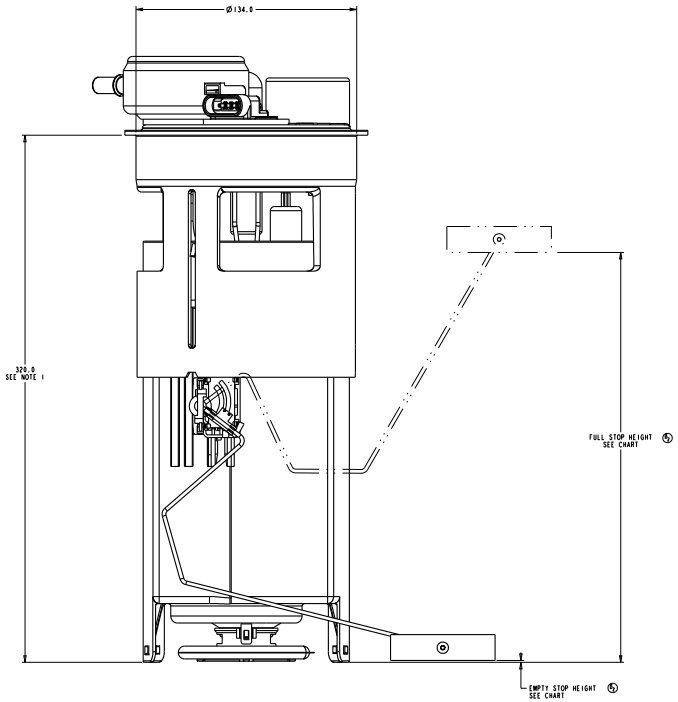

POINT	FLOAT HEIGHT	RESISTANCE (OHMS)
FULL STOP	249.2	5±3
EMPTY STOP	0.0	102±3

NOTES:

1. FUEL MODULE IS SHOWN IN INSTALLED POSITION. TRAVEL FROM THIS POSITION IS ±25mm.
2. THIS UNIT REPLACES CHRYSLER OEM P/N
   4762407
   4762408
   4762991
   52018620
   52121578
   52121579

THIS DRAWING IS THE PROPERTY OF TI AUTOMOTIVE. IT IS SUBMITTED IN CONFIDENCE AND MUST NOT BE DISCLOSED TO OTHERS OR REPRODUCED, EXCEPT AS NECESSARY TO OBTAIN QUOTATIONS FROM VENDORS WHEN THE PART OR SERVICE DESCRIBED HEREIN IS TO BE MANUFACTURED OR PROCURED BY VENDORS OR SUBCONTRACTORS OF TI AUTOMOTIVE. THIS DRAWING OR ANY PART THEREOF MUST NOT BE USED FOR MANUFACTURE OR SALE WITHOUT WRITTEN AUTHORIZATION FROM TI AUTOMOTIVE.

◆ DENOTES ASSEMBLY/TEST/PROCESS
◆ DENOTES SAFETY CHARACTERISTIC
◊ DENOTES SIGNIFICANT CHARACTERISTIC

INTERNAL USE ONLY
DISTRIBUTION CODE
AF

REF: FM0000345

DO NOT SCALE PRINT

DIMENSIONS AND TOLERANCES PER INSTITUTE OF ENGINEERING

PROJECTION

PRO-E

E SIZE

TI Automotive
AFTERMARKET DIVISION
600 COLUMBIA STREET
CARO, MICHIGAN 48723

TOLERANCE UNLESS OTHERWISE SPECIFIED: .X ±0.06 .XX ±0.25 .XXX ±0.13 ANGLES ±1° FRACTIONS ±1/64	MATERIAL
	FINISH
SCALE: 1:1	DATE: 4/2/03
DRN. BY: D.P.ZBORAY	
CHK'D BY:	
APPR'D BY:	

TITLE: FUEL DELIVERY MODULE

DRAWING NO. TU122 REV. C